UNIVERSITATEA TEHNICĂ DIN CLUJ-NAPOCA

Facultatea de Electronică, Telecomunicații și Tehnologia Informației

Circuit for controlling the concentration of carbon monoxide

Dimir Eusebiu-Emanuel

Assist. Prof. Fizesan Raul-Traian, PhD Eng.

Contents

1.Requirements 4
2. Theoretical foundation 5
2.1 Noninverting hysteresis comparator 5
2.2 Noninverting voltage domain conversion amplifier 5
2.3 Voltage divider 6
2.4 Voltage follower 6
3. Circuit diagram 7
4. Calculus of the passive components 8
4.1 Noninverting voltage domain convertor 8
4.2 Voltage follower 10
4.3 Noninverting hysteresis comparator 11
4.4 Purple LED 14
4.5 Relay 15
5. Standardization 17
6. Simulations 20
6.1 DC sweep-Parametric 20
6.2 Monte Carlo 23
6.3 Worst Case 26
7. Conclusion 29
8. Bill of materials 30
9. References 32

Figure 1.Noninverting hysteresis comparator 5
Figure 2.Noninverting voltage domain conversion amplifier 5
Figure 3.Voltage divider 6
Figure 4.Voltage follower 6
Figure 5.Sensor's voltage divider 8
Figure 6.Noninverting voltage domain convertor with unknown resistances 9
Figure 7.Noninverting voltage domain convertor with known resistances 10
Figure 8.Voltage follower of V2 10
Figure 9.V(range) plot 11
Figure 10.Noninverting hysteresis comparator with unknown resistances 11
Figure 11.Plot of Resistances in function of concentration 12
Figure 12.Low and High thresholds 12
Figure 13.Noninverting hysteresis comparator with known resistances 13
Figure 14.Low V(range) and threshold Figure 15.High V(range) and threshold 13
Figure 16.LED 14
Figure 17.LED's datasheet 14
Figure 18.Led current 15
Figure 19.Relay 15
Figure 20.Current on Relay 16
Figure 21.Standardization of R2 17
Figure 22.Standardization of R3 and R4 17
Figure 23.Standardization of R5 and R6 18
Figure 24.Standardization of R7 and R8 18
Figure 25.Standardization of R9 18
Figure 26.Standardization of R10 18
Figure 27.Standardization of R17 19
Figure 28.Standardization of R13 19
Figure 29.Standardized Circuit 19
Figure 30.Simulation profile when the concentration increases 20
Figure 31.Hysteresis when the concentration increases 20
Figure 32.Relay when the concentration increases 21
Figure 33.LED when the concentration increases 21
Figure 34.Simulation profile when the concentration decreases 22
Figure 35.Hysteresis when the concentration decreases 22
Figure 36.Relay when the concentration decreases 23
Figure 37.LED when the concentration decreases 23
Figure 38.Simulation profile for Monte Carlo analysis 24
Figure 39.Monte Carlo on upper threshold 24
Figure 40.Performance Analysis MAX(Range) 25
Figure 41.Monte Carlo on lower threshold 25
Figure 42. Performance Analysis MAX(Range) 26
Figure 43.Plot V(Range) in worst case 26
Figure 44.Output file worst case from 36k to 6k 27
Figure 45.Summary 27

1. Requirements

The objective of this project is to design a control system that uses a resistive gas sensor to maintain the concentration of carbon monoxide (CO) within a predefined range, as specified in Column E. Within the enclosed environment, there exists a continuous source of carbon monoxide emission.

When the CO concentration reaches the upper threshold indicated in Column E, the system will activate a fan to introduce fresh air into the enclosure. Once the concentration decreases to the lower threshold, the system will deactivate the fan.

According to the sensor's datasheet, the electrical resistance of the gas sensor varies linearly with the gas concentration over the range specified in Column F, and this variation occurs within the resistance interval specified in Column G. This change in resistance must be converted into a corresponding voltage variation within the range [2V, Vcc−2 V], where Vcc is defined in Column H.

Fan control will be implemented using a hysteresis comparator, which drives a relay modeled as a resistor. The operational state of the fan (on/off) will be indicated by an LED, whose color is specified in Column I.

	E	F	G	H	I
Student Name	**Indoor carbon monoxide concentration [ppm]**	**The measurement range of the sensor [ppm]**	**Sensor Resistance [kΩ]**	**Vcc [V]**	**LED Colour**
Dimir Eusebiu Emanuel	250 ... 9000	200 ... 12000	36-6	11V	Purple

2. Theoretical foundation

2.1 Noninverting hysteresis comparator

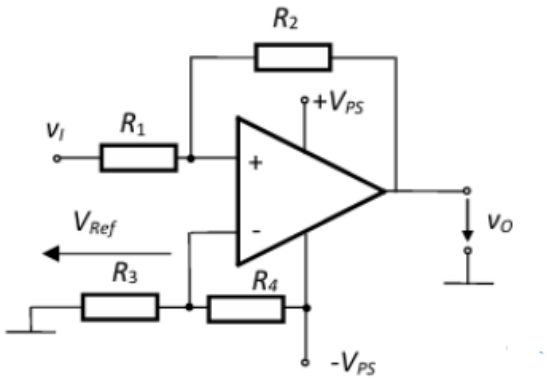

Figure 1.Noninverting hysteresis comparator

$$V_{ref} = \frac{R_3}{R_3+R_4}(-V_{PS}) \quad (1)$$

$$V_{th_L} = -\frac{R_1}{R_2}V_{OH} + (1+\frac{R_1}{R_2})V_{ref} \quad (2)$$

$$V_{th_H} = -\frac{R_1}{R_2}V_{OL} + (1+\frac{R_1}{R_2})V_{ref} \quad (3)$$

2.2 Noninverting voltage domain conversion amplifier

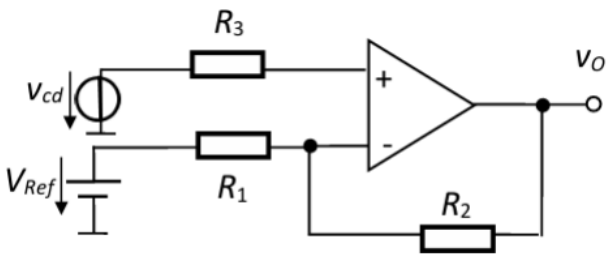

Figure 2.Noninverting voltage domain conversion amplifier

$$V_O = \left(1+\frac{R_2}{R_1}\right)V_{cd} - \frac{R_2}{R_1}V_{ref} \quad (4)$$

$$V_{ref} = \frac{\left(1+\frac{R_2}{R_1}\right)V_{cd_{max}} - V_{O_{max}}}{\frac{R_2}{R_1}} \quad (5)$$

$$gain = 1 + \frac{R_2}{R_1} \tag{6}$$

$$gain = \frac{V_{O_{max}} - V_{O_{min}}}{V_{cd_{max}} - V_{cd_{min}}} \tag{7}$$

2.3 Voltage divider

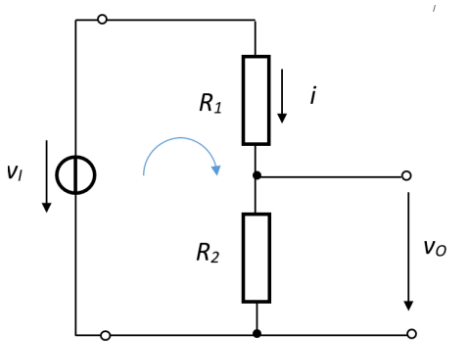

Figure 3.Voltage divider

$$V_O = \frac{R_2}{R_2 + R_1} V_I \tag{8}$$

2.4 Voltage follower

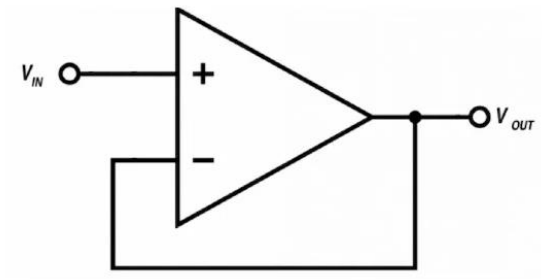

Figure 4.Voltage follower

$$V_{in} = V_{out} \tag{9}$$

3. Circuit diagram

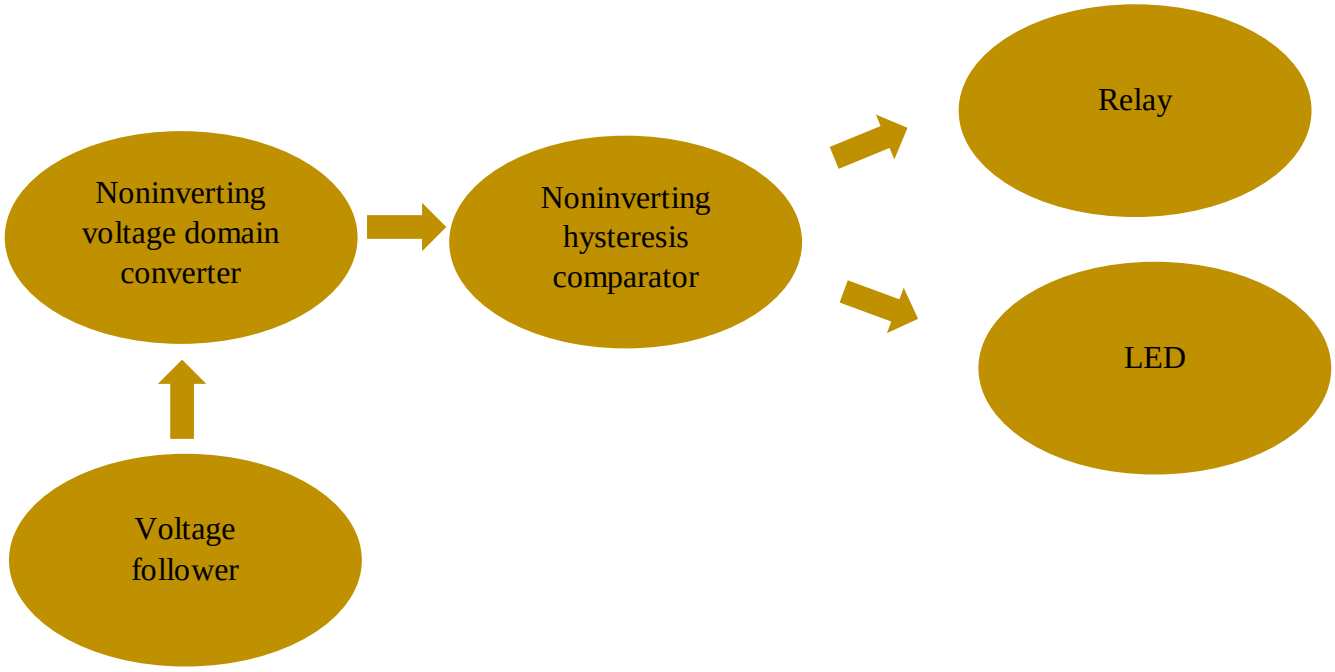

The non-inverting voltage domain converter was used so that the sensor's output, which varies in resistance and therefore in voltage, could be shifted and scaled into a defined range between 2 V and Vcc – 2.

To support this stage, a voltage follower was implemented to act as a second voltage source for the non-inverting voltage domain converter. The voltage follower provides a stable reference voltage with high input impedance and low output impedance, ensuring isolation and minimizing any loading effect on the signal source.

After the domain conversion, a non-inverting hysteresis comparator was implemented. This comparator performs both threshold detection and fan control by monitoring the conditioned signal and activating the output when the signal crosses preset voltage levels. The inclusion of hysteresis creates a defined margin between the ON and OFF states.

To control the fan, the output of the comparator drives a relay, which was modeled as a resistor in the simulation for simplicity. When the comparator output goes high, the relay is energized, switching on the fan.

An LED was added in the relay path to provide visual feedback. It lights up when the fan is active, giving a clear indication of the system's operational state

4. Calculus of the passive components

4.1 Noninverting voltage domain convertor

At first, a voltage divider was used, consisting of the sensor resistance, labeled R1 (a variable resistor ranging from 36 kΩ to 6 kΩ), and a fixed resistor R2 with a value of 6 kΩ. R2 was connected to ground, forming the lower part of the divider.

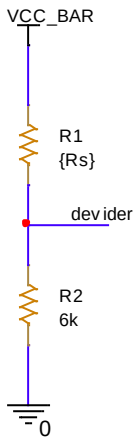

Figure 5.Sensor's voltage divider

$$V_{devider} = \frac{R_2}{R_2 + R_1} V_{CC}$$

$$V_{devider_{max}} = \frac{6k}{6k + 6k} 11 = \frac{1}{2} 11 = 5.5V$$

$$V_{devider_{min}} = \frac{6k}{6k + 36k} 11 = \frac{66}{42} = 1.57V$$

By running the simulation, it was confirmed that the voltage at the output of the divider varies between 1.57 V and 5.5 V as the sensor resistance changes from 36 kΩ to 6 kΩ.

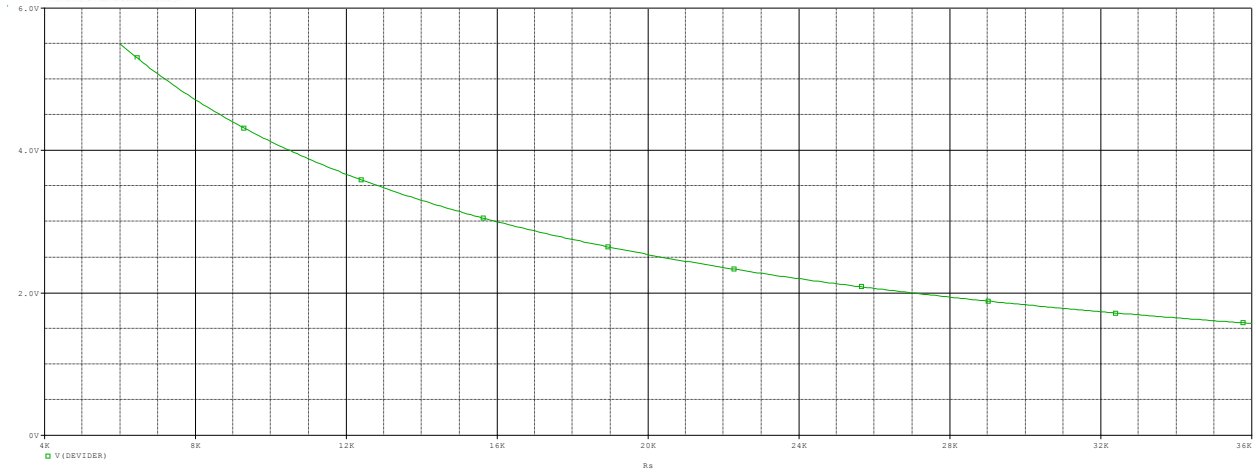

The next step was to connect the voltage from the divider to the non-inverting input of the operational amplifier. At the same time, in order to implement the voltage domain converter, resistors R3 and R4 were connected to the inverting input along with a reference voltage V2

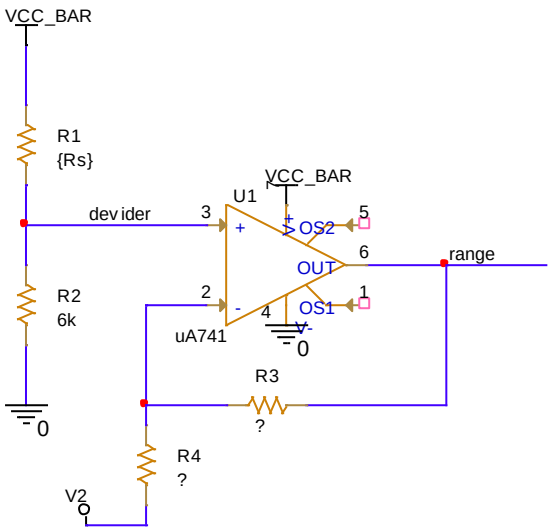

Figure 6.Noninverting voltage domain convertor with unknown resistances

In order to determine the appropriate values for the resistors and the reference voltage, it was assumed that the output of the operational amplifier, V(range), should vary between the target limits of 2 V and 9 V.

$$gain = \frac{V_{range_{max}} - V_{range_{min}}}{V_{devider_{max}} - V_{devider_{min}}} = \frac{9-2}{5.5-1.57} = \frac{7}{3.93} = 1.78$$

$$gain = 1 + \frac{R_3}{R_4} => \frac{R_3}{R_4} = 1.78 - 1 = 0.78$$

Based on the calculated ratio, I chose the value of R3 as 7.8 kΩ and R4 as 10 kΩ.

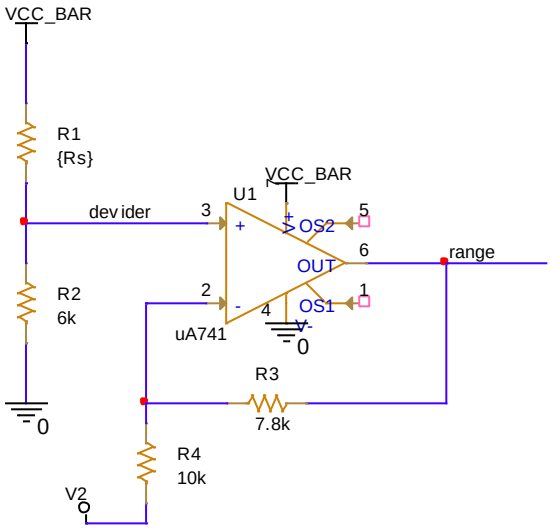

Figure 7.Noninverting voltage domain convertor with known resistances

$$V_2 = \frac{\left(1 + \frac{R_3}{R_4}\right) V_{devider_{max}} - V_{range_{max}}}{\frac{R_3}{R_4}} = \frac{1.78 * 5.5 - 9}{0.78} = \frac{0.79}{0.78} \cong 1V$$

4.2 Voltage follower

The V2 voltage was obtained using a voltage follower, whose input comes from a voltage divider with resistors proportioned in such a way that the output voltage is exactly 1 V (R9=10kΩ and R10=1kΩ).

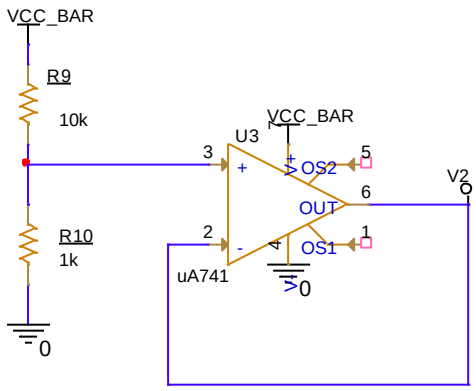

Figure 8.Voltage follower of V2

$$V_2 = \frac{R_{10}}{R_{10} + R_9} V_{CC} = \frac{1}{1+10} 11 = \frac{1}{11} 11 = 1V$$

A DC sweep analysis was carried out to verify that the output voltage range of the circuit remains within the desired limits of 2 V to 9 V.

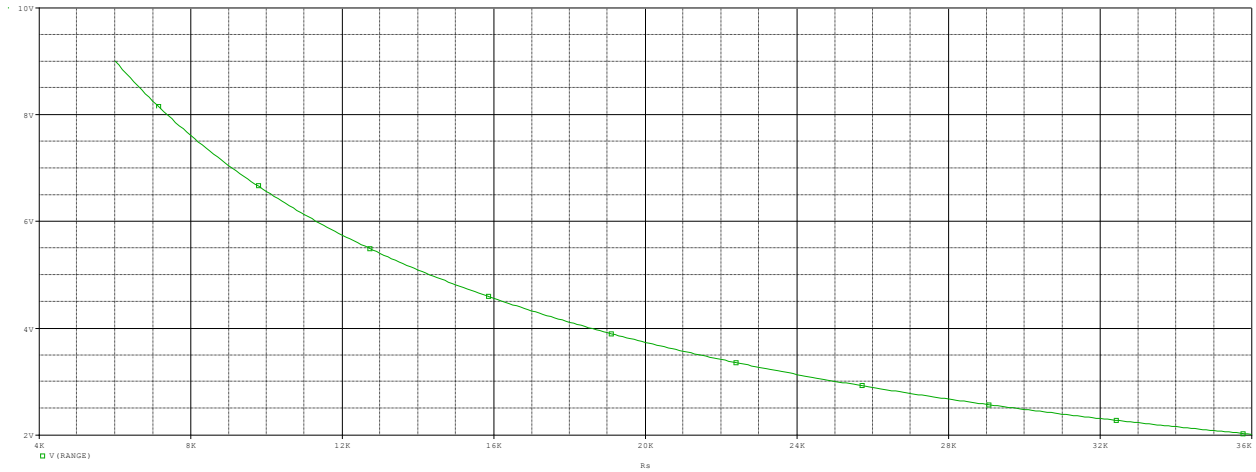

Figure 9.V(range) plot

4.3 Noninverting hysteresis comparator

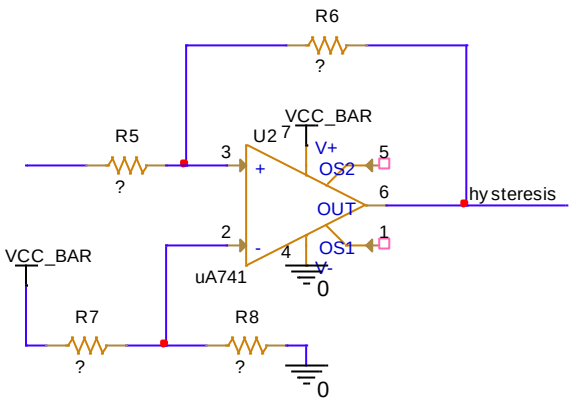

Figure 10.Noninverting hysteresis comparator with unknown resistances

To determine the values of the four resistors used in the operational amplifier configuration, it was first necessary to calculate the two threshold voltages. To do this, I used the equation of a straight line. According to the requirements, the sensor resistance varies linearly with the carbon monoxide concentration. Given that the resistance is 36 kΩ at 200 ppm and 6 kΩ at 12,000 ppm, I calculated the sensor resistance values corresponding to concentrations of 250 ppm and 9,000 ppm.

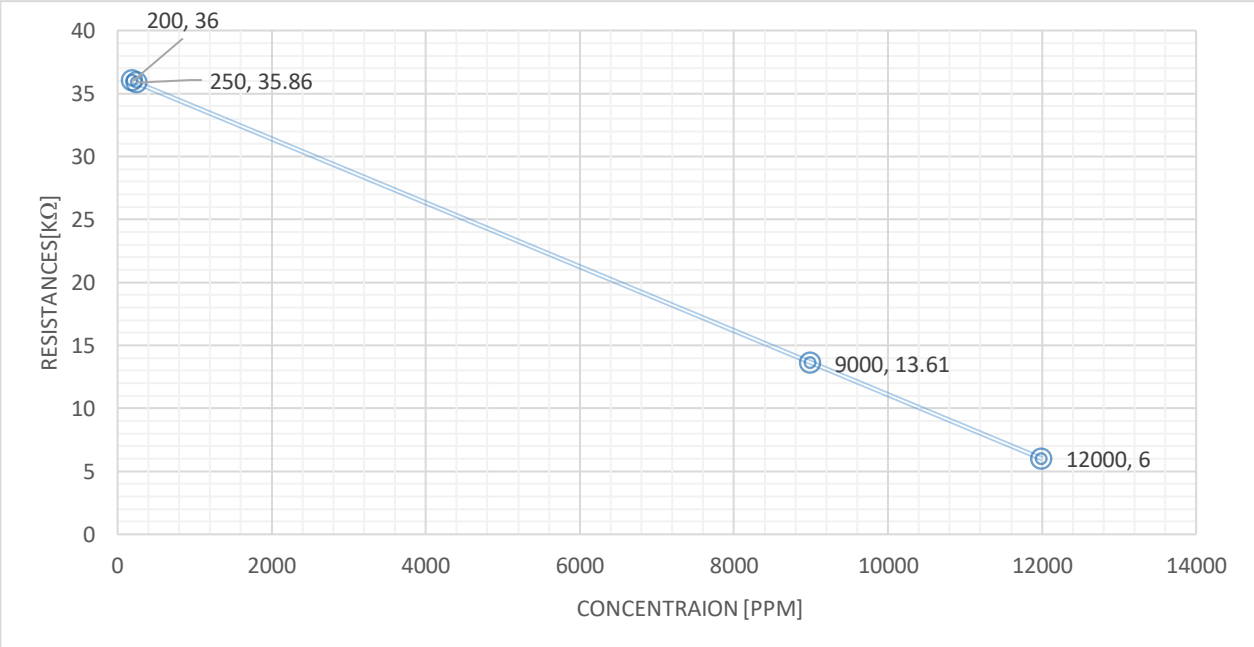

Figure 11.Plot of Resistances in function of concentration

$$slope = \frac{y_2 - y_1}{x_2 - x_1} = \frac{6 - 36}{12000 - 200} = \frac{-30}{11800} k\Omega/ppm$$

The equation of the line is as follows, where c is the concentration of carbon monoxide and B is a constant.

$$R(c) = c * slope + B$$

$$R(200) = 200ppm * \frac{(-30)k\Omega}{11800ppm} + B => B = 36k\Omega - 200ppm * \frac{(-30)k\Omega}{11800ppm} = 36.5k\Omega$$

$$R(250) = 250ppm * \frac{(-30)k\Omega}{11800ppm} + 36.5k\Omega = 35.86k\Omega$$

$$R(9000) = 9000ppm * \frac{(-30)k\Omega}{11800ppm} + 36.5k\Omega = 13.61k\Omega$$

Knowing the two resistance values at which the threshold levels occur, we can look at the plot and determine the corresponding voltages for the two thresholds.

Trace Color	Trace Name	Y1	Y2
	X Values	13.611K	35.858K
CURSOR 1,2	V(RANGE)	5.2108	2.0267

Figure 12.Low and High thresholds

For the calculation of the resistances, I will subtract equation 2 from equation 3 and I will obtain:

$$V_{th_L} - V_{th_H} = -\frac{R_5}{R_6}V_{OH} => 2.02 - 5.21 = -\frac{R_5}{R_6}11 => \frac{R_5}{R_6} = 0.2909$$

Knowing that voltage output low is equal to 0, I can substitute equation 1 into equation 3.

$$V_{th_H} = V_{CC}\left(\frac{R_8}{R_8 + R_7}\right)\left(1 + \frac{R_5}{R_6}\right) => \frac{R_8}{R_8 + R_7} = \frac{5.21}{1.2909 * 11} => 1 + \frac{R_7}{R_8} = 2.72 => \frac{R_7}{R_8} = 1.72$$

I will define the resistance values based on their ratios: R5=2.909kΩ, R6=10 kΩ, R7=17.2 kΩ, R8=10 kΩ.

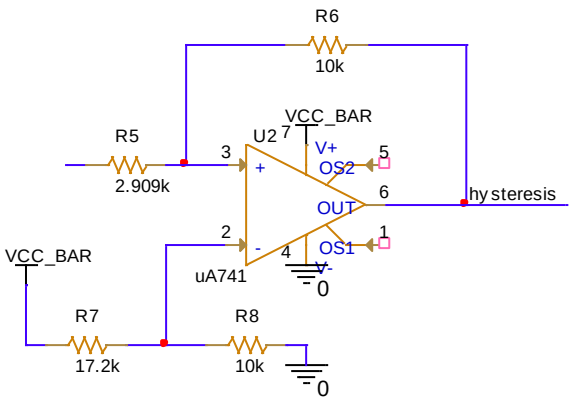

Figure 13.Noninverting hysteresis comparator with known resistances

I then carried out an analysis to determine whether hysteresis is functioning properly.

Trace Color	Trace Name	Y1
	X Values	34.974K
CURSOR 1,2	V(RANGE)	2.0873
	V(HYSTERESIS)	2.9953

Figure 14.Low V(range) and threshold

Trace Color	Trace Name	Y1
	X Values	13.858K
CURSOR 1,2	V(RANGE)	5.1360
	V(HYSTERESIS)	4.6154

Figure 15.High V(range) and threshold

4.4 Purple LED

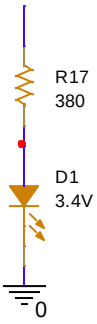

Figure 16.LED

The requirement was to implement a purple LED. I used the Modeling Application feature along with the purple LED's datasheet. To protect the LED, I placed a resistor in series, and I calculated its value in the next step.

Electrical Characteristics
T_A = 25°C & I_F = 20 mA unless otherwise noted

Part Number	Forward Voltage (V)[1]			Recommend Forward Current (mA)			Reverse Current (mA)	Peak Wavelength λp (nm)[2]			Emitting Power (mW)		50% Power Angle (deg)
	MIN	TYP	MAX	MIN	TYP	MAX	MAX	MIN	TYP	MAX	MIN	TYP[3]	TYP
UV3TZ-385-15	2.9	3.2	3.5					382.5	385.0	387.5	10	20	
UV3TZ-390-15	2.9	3.2	3.5					387.5	390.0	392.5	10	20	
UV3TZ-395-15	2.9	3.2	3.5	10	15	20	/	392.5	395.0	397.5	10	20	15
UV3TZ-400-15	2.9	3.2	3.5					397.5	400.0	402.5	10	20	
UV3TZ-405-15	2.9	3.2	3.5					400.0	402.5	405.0	10	20	
UV3TZ-385-30	2.9	3.2	3.5					382.5	385.0	387.5	10	20	
UV3TZ-390-30	2.9	3.2	3.5					387.5	390.0	392.5	20	40	
UV3TZ-395-30	2.9	3.2	3.5	10	15	20	/	392.5	395.0	397.5	20	40	30
UV3TZ-400-30	2.9	3.2	3.5					397.5	400.0	402.5	20	40	
UV3TZ-405-30	2.9	3.2	3.5					400.0	402.5	405.0	20	40	

Figure 17.LED's datasheet

$$R_{17} = \frac{11V - 3.4V}{20mA} = 380\Omega$$

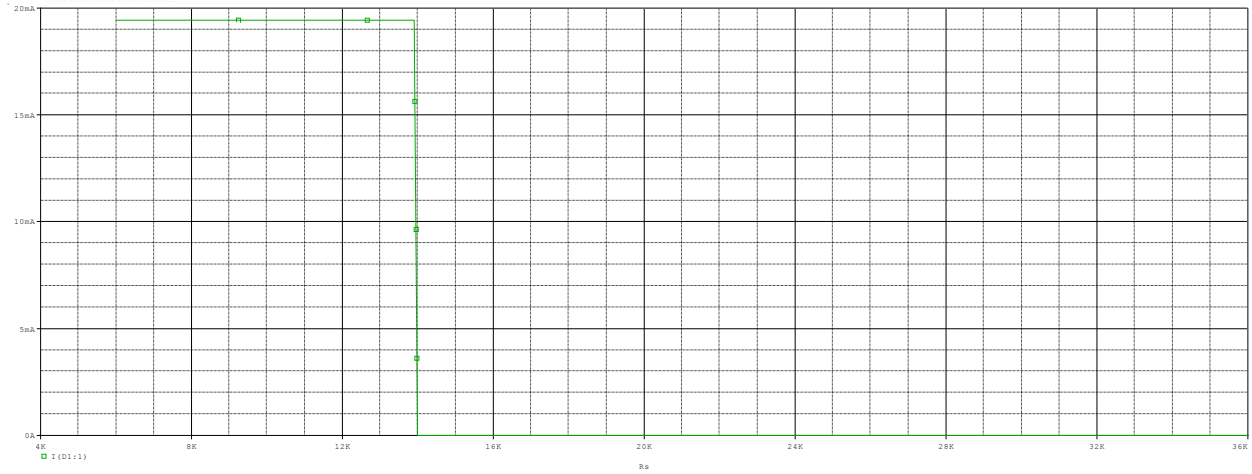

Figure 18.Led current

4.5 Relay

Electrically operated switches, such as relays, typically use an electromagnet. In this project, a key requirement was to model the relay as a resistive load, with the resistance representing the coil's inductive reactance, as specified in the datasheet. The activation voltage provided in the datasheet corresponds to a required operating current, which was determined using Ohm's Law. To ensure proper voltage regulation, this current was supplied through an N-channel MOSFET. The final circuit design was validated and adjusted based on practical testing.

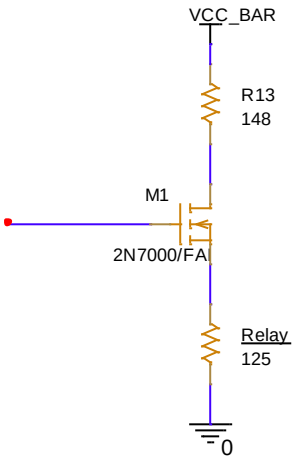

Figure 19.Relay

In my case, I used a 5V relay, whose coil resistance is specified in the datasheet as 125 Ω. By applying Ohm's Law to the MOSFET's output path, I obtain:

$$I = \frac{V_{relay}}{R_{relay}} = \frac{5V}{125\Omega} = 40mA$$

The value of resistor R13, was determined using a DC sweep simulation with a global parameter. A current probe was placed on the relay coil resistor, and the resistance value was adjusted until the relay current reached 40 mA.

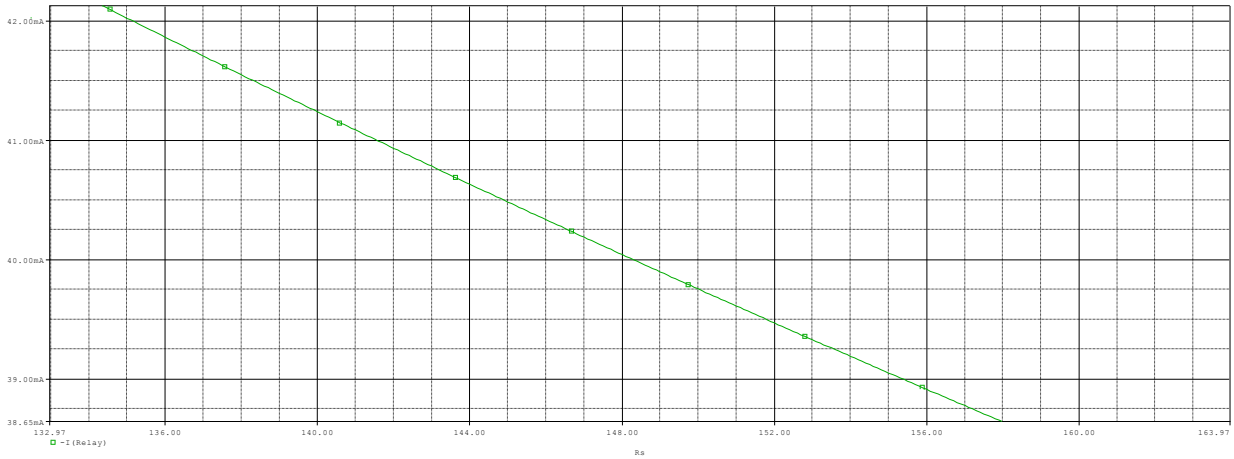

Figure 20.Current on Relay

5. Standardization

The design uses resistors from the E96 series, with resistance values selected based on calculated ratios to achieve the desired circuit performance. Most resistors were selected with a tolerance of 1% to ensure sufficient accuracy and repeatability. However, R7 and R8 were specifically chosen with a tighter 0.5% tolerance, as their role in the circuit requires higher precision.

$$\frac{R_3}{R_4} = 0.78$$

$$\frac{R_5}{R_6} = 0.2909$$

$$\frac{R_7}{R_8} = 1.72$$

For R2=6kΩ:

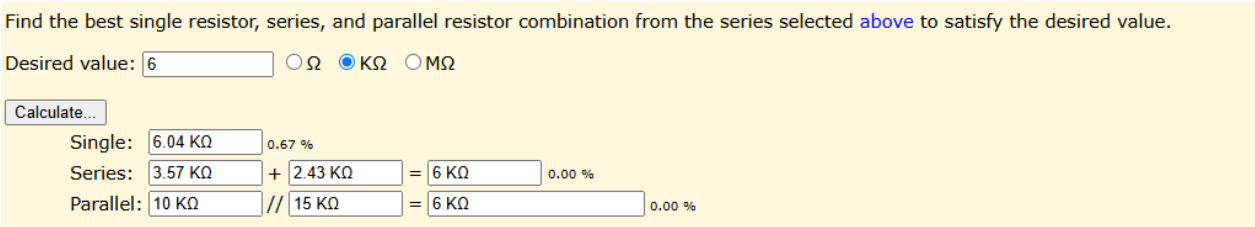

Figure 21.Standardization of R2

For ratio between R3 and R4:

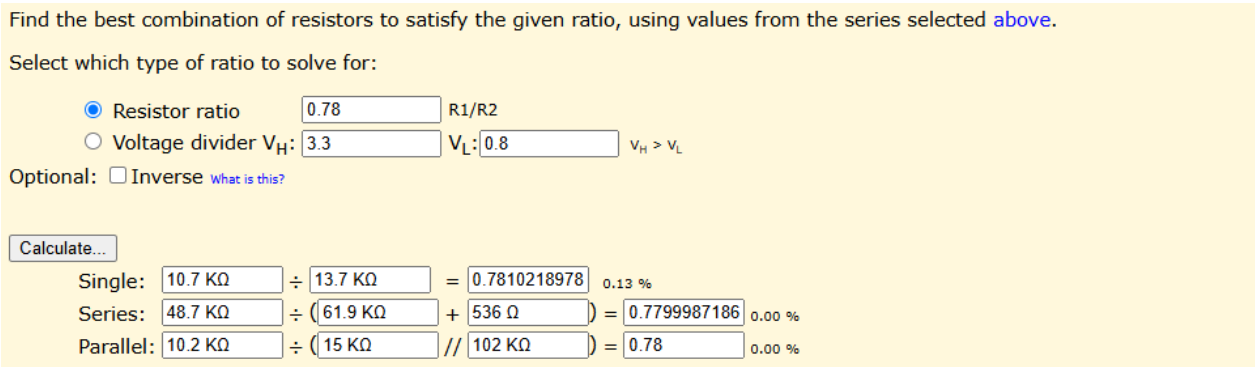

Figure 22.Standardization of R3 and R4

For ratio between R5 and R6:

Find the best combination of resistors to satisfy the given ratio, using values from the series selected above.

Select which type of ratio to solve for:

Resistor ratio 0.2909 R1/R2

Voltage divider V_H: 3.3 V_L: 0.8 $V_H > V_L$

Optional: Inverse What is this?

Calculate...

Single: 30.9 KΩ ÷ 107 KΩ = 0.2887850467 0.73 %

Series: 28 KΩ ÷ (95.3 KΩ + 953 Ω) = 0.2909000238 0.00 %

Parallel: 39.2 KΩ ÷ (169 KΩ // 665 KΩ) = 0.2909000311 0.00 %

Figure 23.Standardization of R5 and R6

For ratio between R7 and R8:

Find the best combination of resistors to satisfy the given ratio, using values from the series selected above.

Select which type of ratio to solve for:

Resistor ratio 1.72 R1/R2

Voltage divider V_H: 3.3 V_L: 0.8 $V_H > V_L$

Optional: Inverse What is this?

Calculate...

Single: 28 KΩ ÷ 16.2 KΩ = 1.7283950617 0.49 %

Series: 21.5 KΩ ÷ (9.76 KΩ + 2.74 KΩ) = 1.72 0.00 %

Parallel: 15.8 KΩ ÷ (15 KΩ // 23.7 KΩ) = 1.72 0.00 %

Figure 24.Standardization of R7 and R8

For R9:

Find the best single resistor, series, and parallel resistor combination from the series selected above to satisfy the desired value.

Desired value: 10 Ω KΩ MΩ

Calculate...

Single: 10 KΩ 0.00 %

Series: 5.36 KΩ + 4.64 KΩ = 10 KΩ 0.00 %

Parallel: 10.5 KΩ // 210 KΩ = 10 KΩ 0.00 %

Figure 25.Standardization of R9

For R10:

Find the best single resistor, series, and parallel resistor combination from the series selected above to satisfy the desired value.

Desired value: 1 Ω KΩ MΩ

Calculate...

Single: 1 KΩ 0.00 %

Series: 536 Ω + 464 Ω = 1 KΩ 0.00 %

Parallel: 1.05 KΩ // 21 KΩ = 1 KΩ 0.00 %

Figure 26.Standardization of R10

For R17:

Find the best single resistor, series, and parallel resistor combination from the series selected above to satisfy the desired value.

Desired value: 380 Ω KΩ MΩ

Calculate...

Single:	383 Ω					0.79 %
Series:	215 Ω	+	165 Ω	=	380 Ω	0.00 %
Parallel:	383 Ω	//	48.7 KΩ	=	380.01 Ω	0.00 %

Figure 27.Standardization of R17

For R13:

Find the best single resistor, series, and parallel resistor combination from the series selected above to satisfy the desired value.

Desired value: 148 Ω KΩ MΩ

Calculate...

Single:	147 Ω					-0.68 %
Series:	93.1 Ω	+	54.9 Ω	=	148 Ω	0.00 %
Parallel:	215 Ω	//	475 Ω	=	148.01 Ω	0.00 %

Figure 28.Standardization of R13

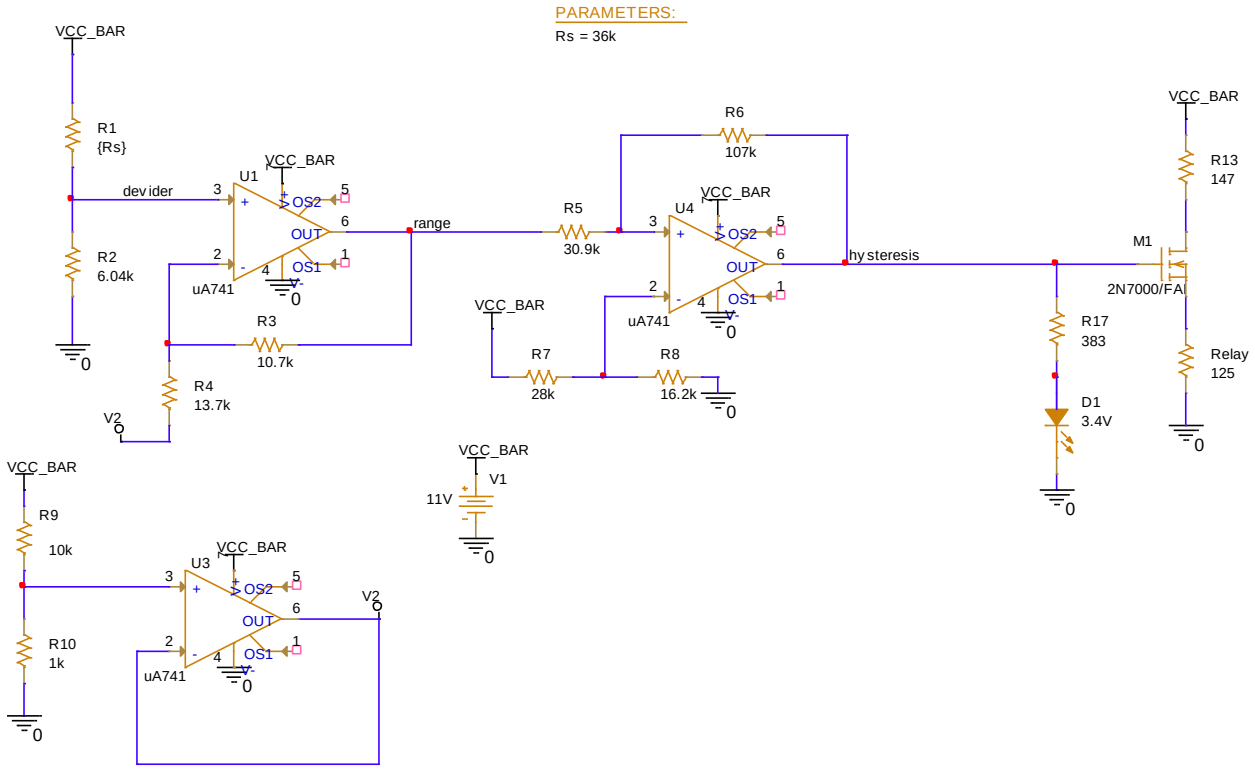

Figure 29.Standardized Circuit

6. Simulations

6.1 DC sweep-Parametric

The first simulation is a DC parametric sweep that shows the voltage range corresponding to the sensor's resistance. It also illustrates the hysteresis effect, highlighting the point at which the upper threshold voltage is reached, meaning that the circuit reacts when the carbon monoxide concentration exceeds the upper limit of 9000 ppm.

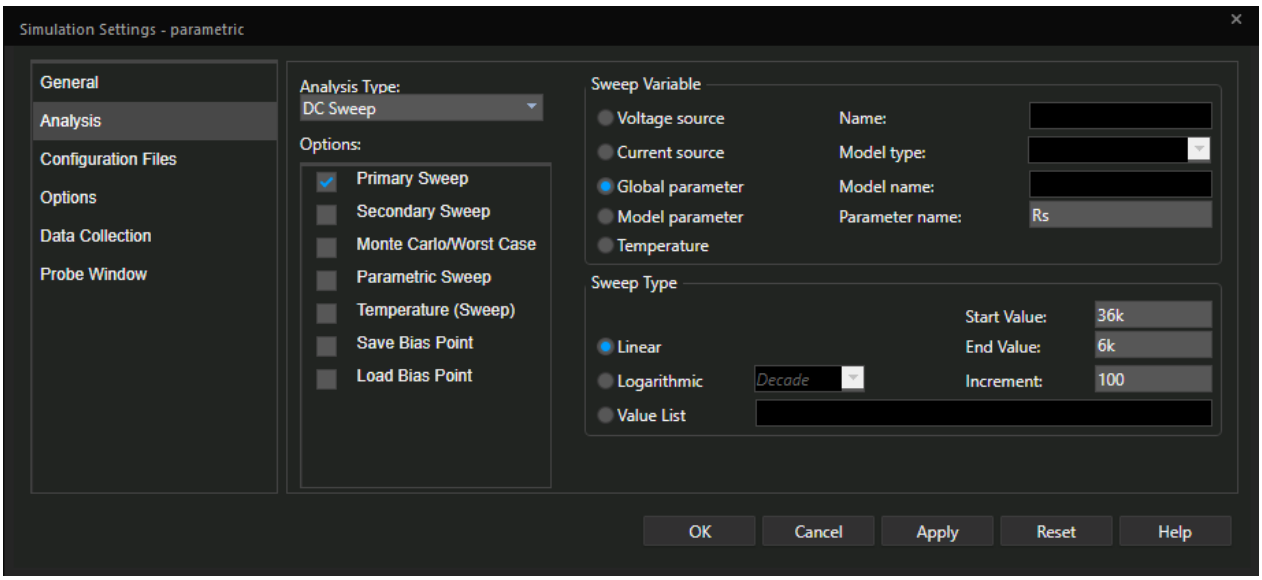

Figure 30.Simulation profile when the concentration increases

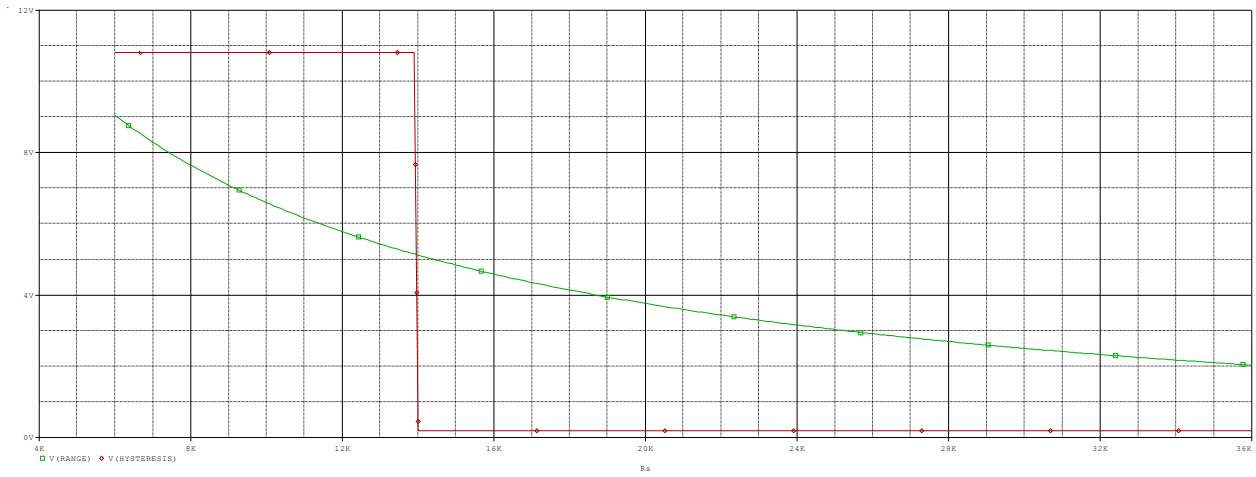

Figure 31.Hysteresis when the concentration increases

When hysteresis is active, it is designed to trigger the relay, which subsequently powers on the fan, ensuring proper ventilation once the threshold is exceeded.

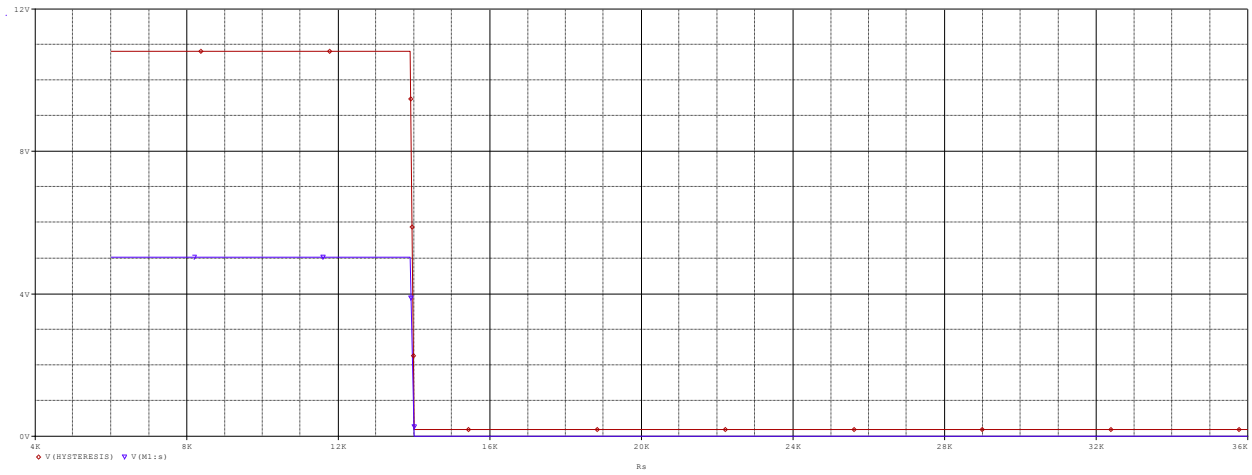

Figure 32.Relay when the concentration increases

Analyzing the state of the LED when the carbon monoxide concentration surpasses the upper threshold reveals that the LED turns on, serving as a visual indicator of a dangerous gas level.

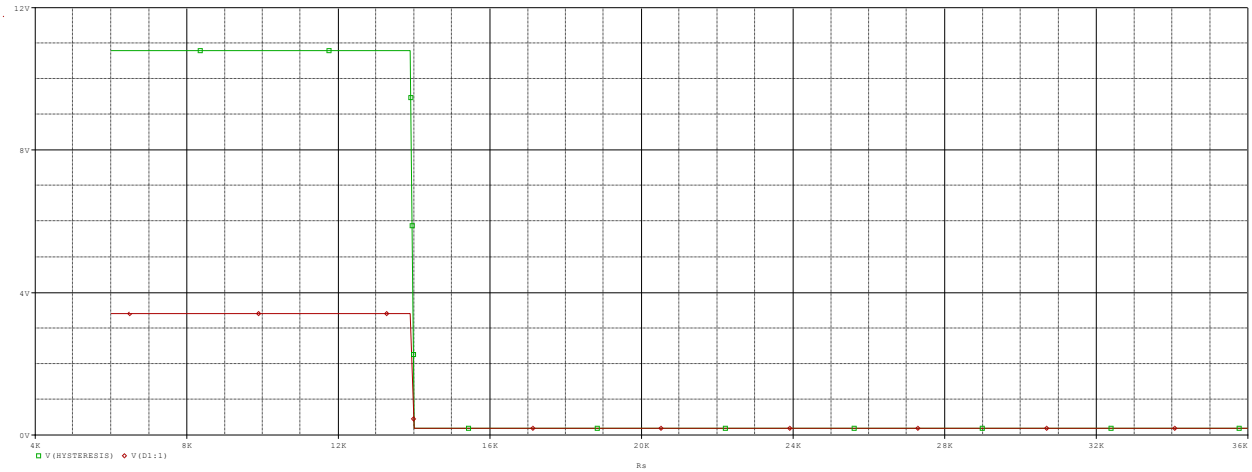

Figure 33.LED when the concentration increases

At the same time, we can analyze the reverse process to observe the behavior of the hysteresis as it approaches the low threshold.

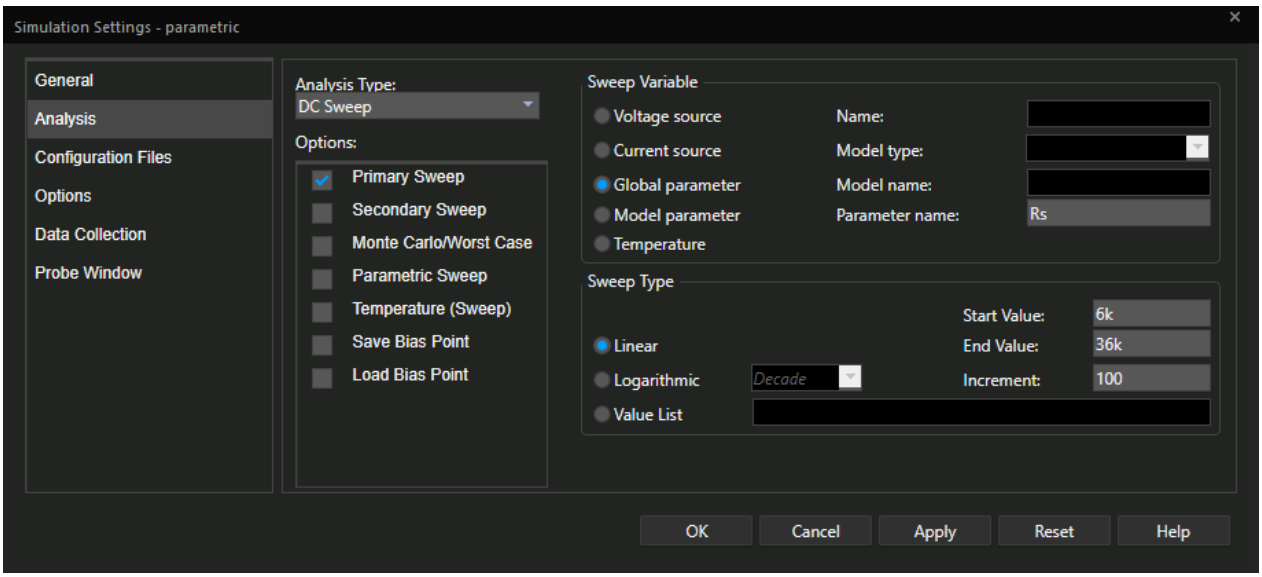

Figure 34.Simulation profile when the concentration decreases

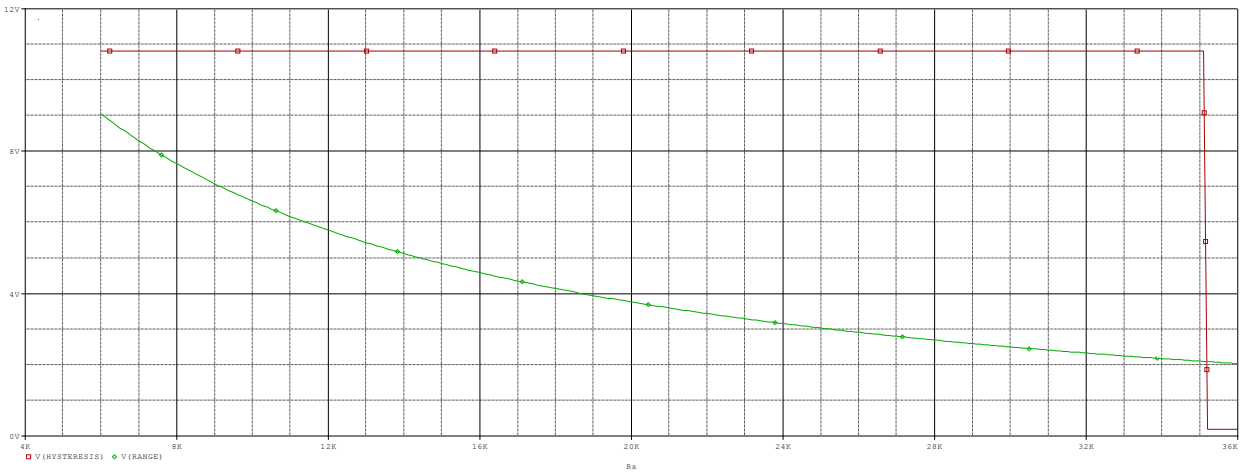

Figure 35.Hysteresis when the concentration decreases

The relay plot below shows that the fan remains active until the carbon monoxide concentration decreases to the lower threshold of 250 ppm, after which the fan is deactivated.

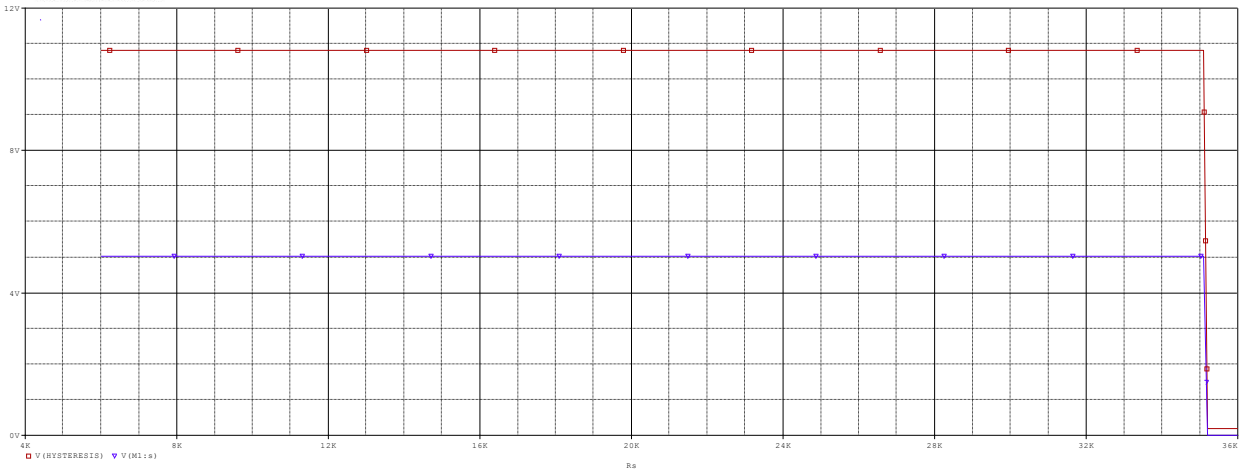

Figure 36.Relay when the concentration decreases

Additionally, we will analyze the behavior of the LED, which turns off once the carbon monoxide concentration decreases back to the lower threshold of 250 ppm.

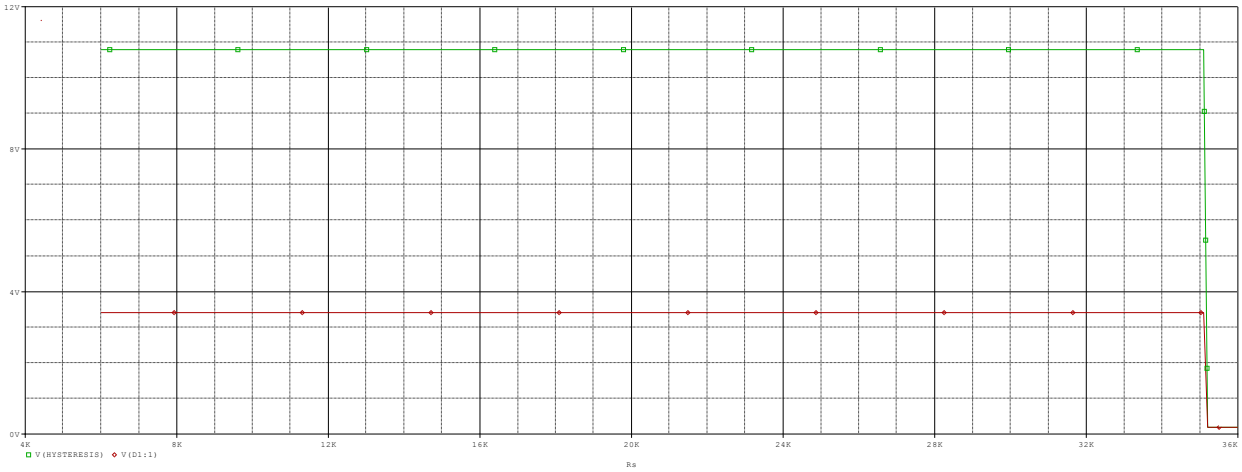

Figure 37.LED when the concentration decreases

6.2 Monte Carlo

In this circuit, Monte Carlo analysis was performed to account for the tolerance of the E96 series resistors used. Although E96 resistors have a tight tolerance of 1%, small variations in their values can still affect the circuit's behavior, especially in threshold levels and switching points. Running Monte Carlo simulations helps to statistically evaluate the circuit's performance under these component variations, ensuring that it functions correctly and reliably despite manufacturing tolerances.

To do this, I took the sensor resistance value at which Rs reaches the upper threshold and set it to that fixed value in the simulation.

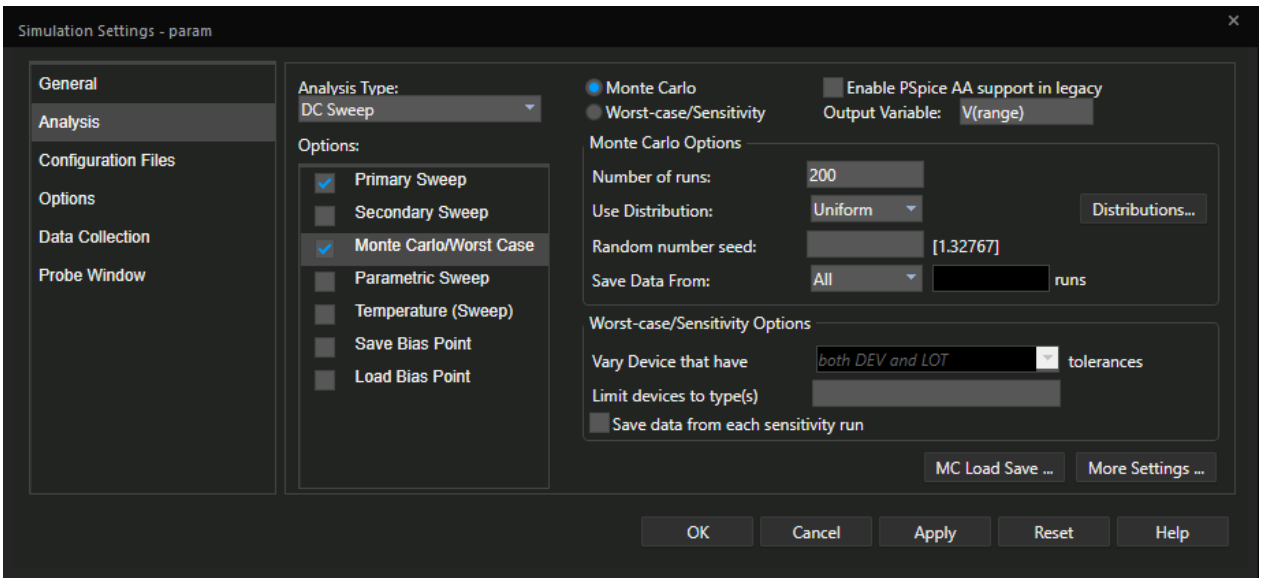

Figure 38.Simulation profile for Monte Carlo analysis

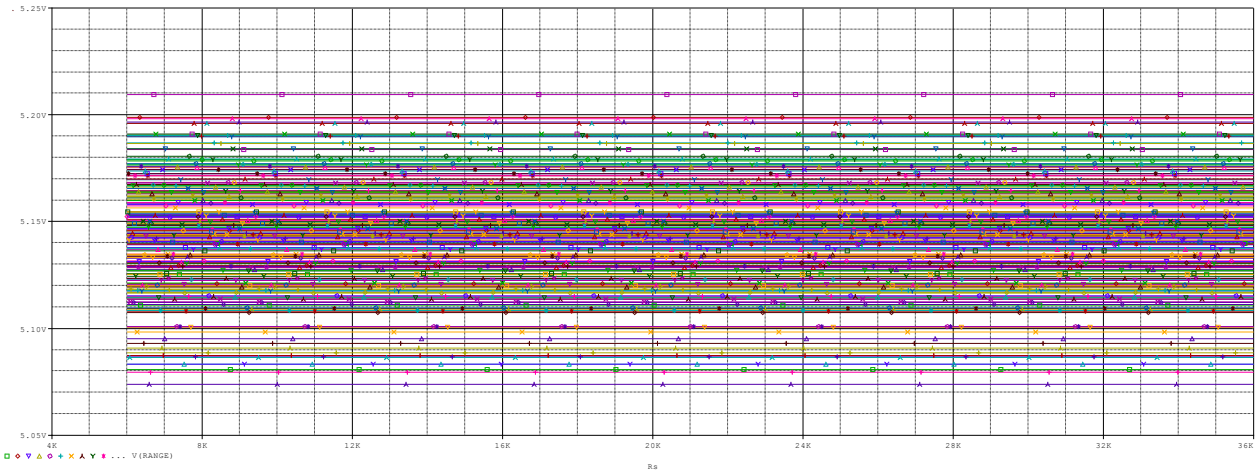

Figure 39.Monte Carlo on upper threshold

Figure 39 shows the Monte Carlo analysis results at the upper threshold condition, with Rs fixed at 13.947 kΩ—the sensor resistance value corresponding to the comparator's upper switching point**.** By setting Rs to this specific value, the simulation directly evaluates how the range signal varies under ±1% resistor tolerance conditions. Each colored line represents one of 200 Monte Carlo runs with random resistor variations applied. We can observe that despite these variations, the range voltage remains tightly clustered around the target upper threshold region (~5.13 V), demonstrating consistent behavior and confirming that the circuit maintains reliable switching performance.

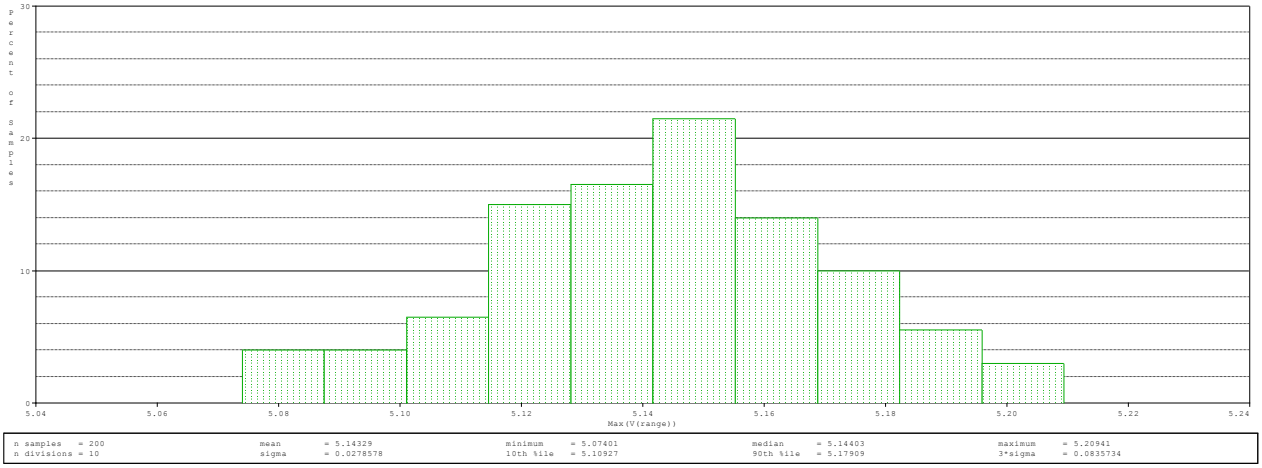

Figure 40.Performance Analysis MAX(Range)

Figure 40 presents the histogram of the maximum range values obtained from this Monte Carlo analysis. The histogram illustrates the statistical distribution of range at Rs = 13.947 kΩ across 200 runs. The mean value is approximately 5.14 V with a standard deviation of about 28 mV, spanning from around 5.07 V to 5.21 V. This narrow spread indicates that the voltage remains well-centered near the comparator's upper switching threshold even when resistor tolerances are included, ensuring robust and dependable fan activation at high CO concentrations.

I performed the same analysis for the lower threshold, with the only difference being the value of Rs, which was now set to 35.150 kΩ to correspond to the comparator's lower switching point.

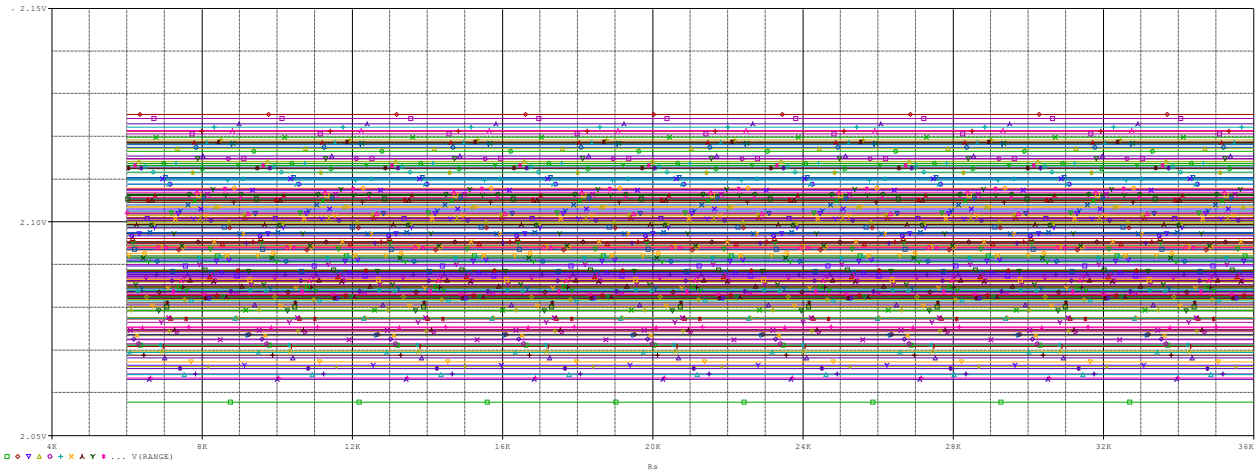

Figure 41.Monte Carlo on lower threshold

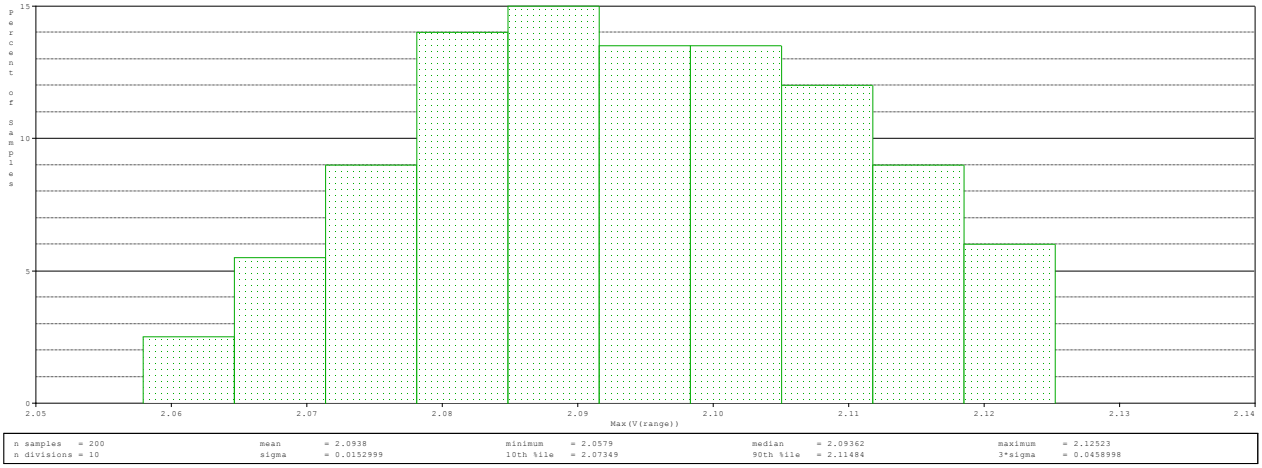

Figure 42. Performance Analysis MAX(Range)

We can observe in the histogram for the lower threshold (Figure 42) that the range signal remains tightly distributed despite resistor tolerances. The mean value is approximately 2.09 V, with a minimum of about 2.06 V and a maximum around 2.12 V. The standard deviation is roughly 15 mV, indicating a narrow spread around the target lower switching threshold, which ensures reliable and consistent fan deactivation even under component variations.

6.3 Worst Case

Sensitivity analysis identifies which parameters are most critical to the circuit's operation. It evaluates how much each component influences circuit behavior—either individually or in combination with others. The analysis also simulates worst-case scenarios by varying all component values within their specified tolerances to assess the circuit's reliability.

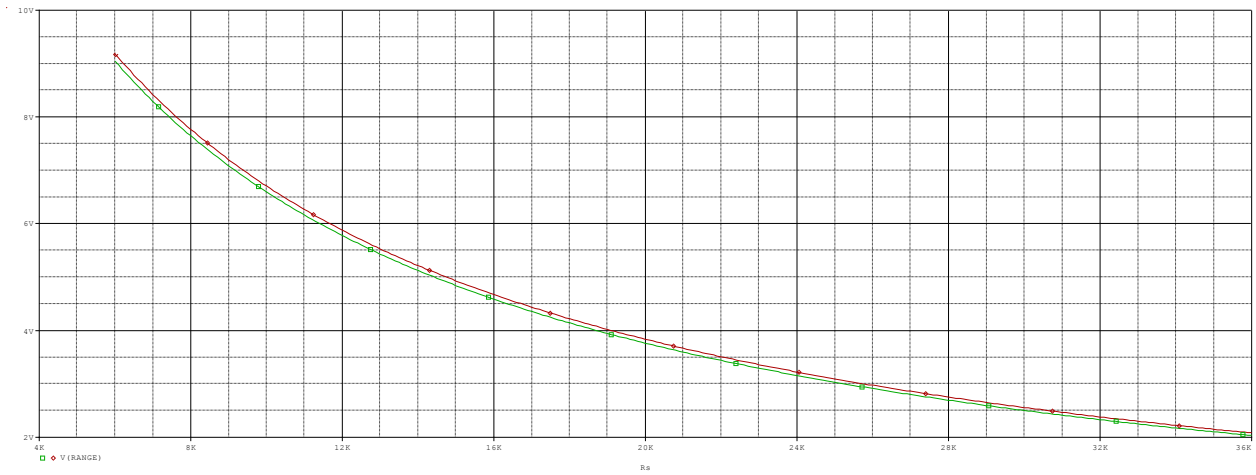

Figure 43.Plot V(Range) in worst case

Figure 43 shows the range voltage plotted as a function of Rs in the worst-case scenario. The red curve represents the range signal when all resistor values are set to the worst-case tolerance combination determined by the analysis, while the green curve shows the nominal behavior. We can observe that the worst-case curve shifts slightly upward compared to the nominal, indicating a small increase in range voltage across the entire Rs span. Despite this shift, the curve remains smooth and follows the same general trend, confirming that even with extreme tolerance stacking the output conversion characteristic preserves its intended shape, ensuring reliable comparator switching thresholds.

Device	MODEL	PARAMETER	NEW VALUE	
R_R2	R_R2	R	1.01	(Increased)
R_R6	R_R6	R	1.01	(Increased)
R_R7	R_R7	R	1.005	(Increased)
R_R3	R_R3	R	1.01	(Increased)
R_R13	R_R13	R	1.01	(Increased)
R_R8	R_R8	R	.995	(Decreased)
R_R4	R_R4	R	.99	(Decreased)
R_R5	R_R5	R	.99	(Decreased)
R_R10	R_R10	R	.99	(Decreased)
R_R9	R_R9	R	1.01	(Increased)
R_R17	R_R17	R	1.01	(Increased)

Figure 44.Output file worst case from 36k to 6k

Figure 44 displays the specific resistor settings selected by the worst-case analysis to maximize deviation from nominal behavior. Each resistor in the design is shown with its assigned tolerance limit (either increased or decreased), with values ranging from +1% to –1% of nominal. This combination represents the most unfavorable but still realistic scenario within the E96 tolerance specification. The result is a deliberately constructed stress case that tests the circuit's ability to maintain correct functionality despite simultaneous worst-case component variations.

```
Mean Deviation =  10.616
Sigma          =  0

 RUN              MAX DEVIATION FROM NOMINAL

WORST CASE ALL DEVICES
                 10.616  higher  at Rs =  14.4000E+03
                 (  5.8771E+03% of Nominal)
```

Figure 45.Summary

Figure 45 shows the worst-case analysis summary. It reports that pushing all resistor tolerances to their extreme limits causes the range signal to shift by about 10.62 mV at Rs =14.4 kΩ. This small deviation confirms the circuit will still switch reliably at the designed CO detection thresholds, even under worst-case conditions.

7. Conclusion

The developed circuit effectively fulfills its purpose of maintaining carbon monoxide (CO) concentration within a safe range by controlling a ventilation fan based on sensor input. Using a resistive gas sensor, the circuit converts changes in CO concentration into a corresponding voltage signal through a voltage divider and a non-inverting voltage domain conversion amplifier. This signal is then processed by a non-inverting hysteresis comparator, which reliably triggers the fan and visual indicator (purple LED) at the predefined thresholds.

The simulation results validate the circuit's functionality: the fan activates at high CO concentrations and deactivates when levels drop below the lower threshold, demonstrating accurate hysteresis behavior. Additional simulations under varying tolerances confirm the stability of the design, with minimal deviations in performance.

Overall, the circuit is both efficient and reliable for real-world applications requiring atmospheric CO control.

8. Bill of materials

2		10.7KXBK-ND MFR-25FBF52-10K7 YAGEO RES 10.7K OHM 1% 1/4W AXIAL Referință client	1	Imediat	0,45000	0,45 lei
3		RNF14FTD6K04CT-ND RNF14FTD6K04 Stackpole Electronics Inc RES 6.04K OHM 1% 1/4W AXIAL Referință client	1 Bandă tăiată la lungime (CT)	Imediat	0,45000	0,45 lei
4		13-MFR-25FRF52-13K7CT-ND MFR-25FRF52-13K7 YAGEO RES 13.7K OHM 1% 1/4W AXIAL Referință client	1 Bandă tăiată la lungime (CT)	Imediat	0,45000	0,45 lei
5		RNF14FTD16K2CT-ND RNF14FTD16K2 Stackpole Electronics Inc RES 16.2K OHM 1% 1/4W AXIAL Referință client	1 Bandă tăiată la lungime (CT)	Imediat	0,45000	0,45 lei
6		RNF14FTD28K0CT-ND RNF14FTD28K0 Stackpole Electronics Inc RES 28K OHM 1% 1/4W AXIAL Referință client	1 Bandă tăiată la lungime (CT)	Imediat	0,45000	0,45 lei
7		30.9KXBK-ND MFR-25FBF52-30K9 YAGEO RES 30.9K OHM 1% 1/4W AXIAL Referință client	1	Imediat	0,45000	0,45 lei
8		107KXBK-ND MFR-25FBF52-107K YAGEO RES 107K OHM 1% 1/4W AXIAL Referință client	1	Imediat	0,45000	0,45 lei
9		13-MFR-25FBF52-147R-ND MFR-25FBF52-147R YAGEO RES 147 OHM 1% 1/4W AXIAL Referință client	1	Imediat	0,45000	0,45 lei
1		492-1808-ND UV3TZ-390-15 Bivar Inc. EMITTER UV 390NM 20MA RADIAL Referință client	1	Imediat	10,27000	**10,27 lei**

10		255XBK-ND MFR-25FBF52-255R YAGEO RES 255 OHM 1% 1/4W AXIAL Referință client	1	Imediat	0,45000	0,45 lei
11		RNF14FTD1K00CT-ND RNF14FTD1K00 Stackpole Electronics Inc RES 1K OHM 1% 1/4W AXIAL Referință client	1 Bandă tăiată la lungime (CT)	Imediat	0,45000	0,45 lei
12		13-MFR-25FRF52-10KCT-ND MFR-25FRF52-10K YAGEO RES 10K OHM 1% 1/4W AXIAL Referință client	1 Bandă tăiată la lungime (CT)	Imediat	0,45000	0,45 lei
13		296-15051-1-ND UA741CDR Texas Instruments IC OPAMP GP 1 CIRCUIT 8SOIC Referință client	1 Bandă tăiată la lungime (CT)	Imediat	1,56000	1,56 lei
		Element-rând duplicat. Notă.				
14		296-15051-1-ND UA741CDR Texas Instruments IC OPAMP GP 1 CIRCUIT 8SOIC Referință client	1 Bandă tăiată la lungime (CT)	Imediat	1,56000	1,56 lei
		Element-rând duplicat. Notă.				
15		296-15051-1-ND UA741CDR Texas Instruments IC OPAMP GP 1 CIRCUIT 8SOIC Referință client	1 Bandă tăiată la lungime (CT)	Imediat	1,56000	1,56 lei
		Element-rând duplicat. Notă.				
16		2N7000FS-ND 2N7000 onsemi MOSFET TO92 N 60V 0.2A 5OHM 150C Referință client	1	Imediat	2,23000	2,23 lei

1		Mouser No: Mfr. No: Mfr.: Customer No:	893-833H-1C-S-5VDC 833H-1C-S-5VDC Song Chuan Customer No	General Purpose Relays GP/IND RELAY RoHS Compliant QuickView	1	1 Dispatches Now	6,83 RON	6,83 RON

The total estimated cost for implementing the circuit amounts to 28,98 RON.

9. Bibliography

[1] "Electronic devices — materiale didactice," Universitatea Tehnică Cluj-Napoca, [Online]. Available at : http://www.bel.utcluj.ro/dce/didactic/ed/

[2] "How Relays Work — Basic working principle electronics engineering electrician amp," YouTube, [Online]. Available at : https://www.youtube.com/watch?v=n594CkrP6xE

[3] "How to create an LED SPICE model," EMA Design Automation, [Online]. Available at : https://www.ema-eda.com/how-to-page/how-to-create-an-led-spice-model/

[4] "Mouser Electronics," [Online]. Available at : https://eu.mouser.com/

[5] Jansson Electronics, "Resistors," [Online]. Available at : https://jansson.us/resistors.html

[6] "Digi-Key Electronics," [Online]. Available at : https://www.digikey.ro